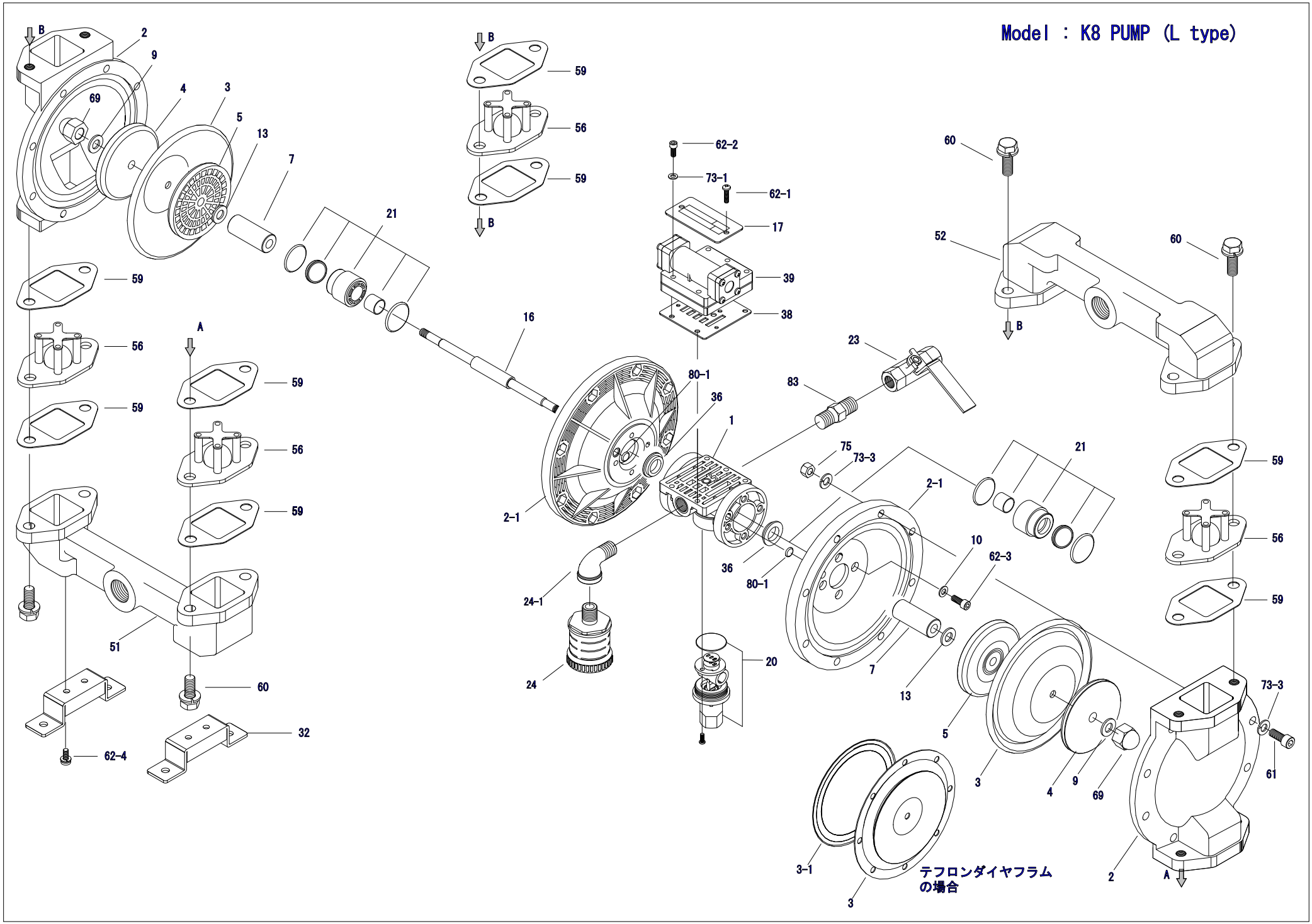Model : K8 PUMP (L type)